LAST SAVED BY - MLEE ON FRIDAY, 7 FEBRUARY 2025 12:30:10 PM REV-0

FIBRE CONCRETE PRODUCT NOTE:
1. REFER TO GENERAL TOLERANCES UNO
2. 40MPa FIBRE REINFORCED CONCRETE (FIBRECON MP47@5Kg/M³)
3. ALL LIFTING POINTS TO BE USED WHEN LIFTING
4. MINIMUM STRENGTH OF CONCRETE SHALL BE 25MPa AT THE TIME OF LIFTING
5. COVER TO REINFORCEMENT TO BE 25mm
6. REFER TO ANCON LIFTING ARRANGEMENT PLAN
7. CONCRETE VOLUME = 0.47M³

CONSTRUCTION TOLERANCE FOR PIT
- OVERALL DEPTH: ±10mm
- WALL AND BASE THICKNESS: ±5MM
- FLATNESS OF TOP SURFACE: 0 AND -5MM IN 1 SQM AREA

SURFACE FINISH
- ALL SIDES: OFF-FORM FINISH

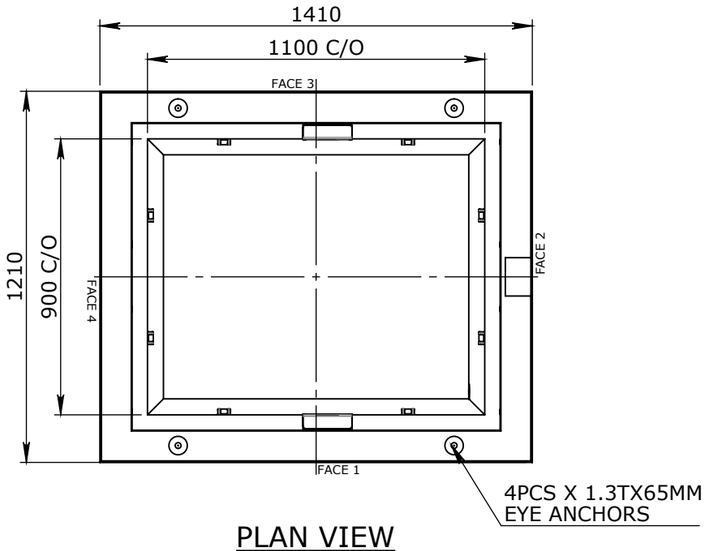

PLAN VIEW

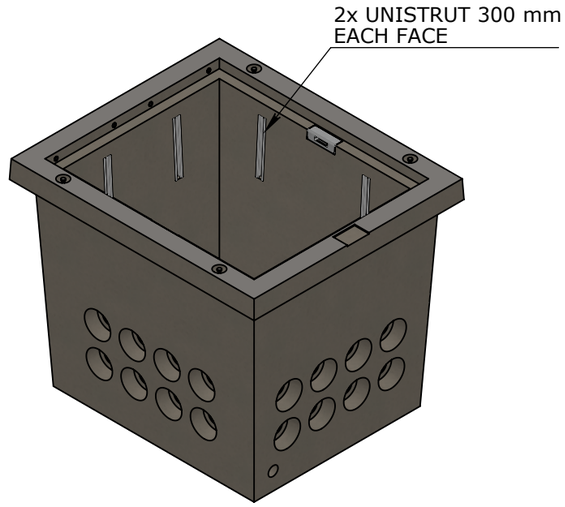

ISOMETRIC VIEW

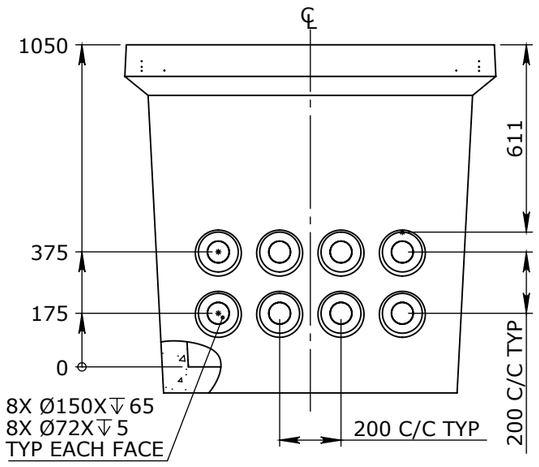

FACE 4

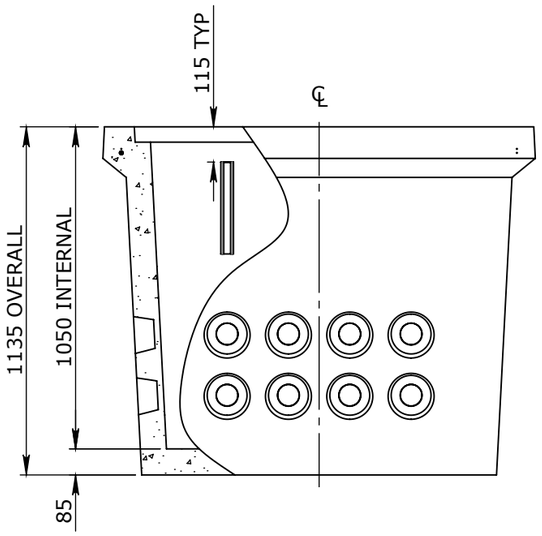

FACE 1

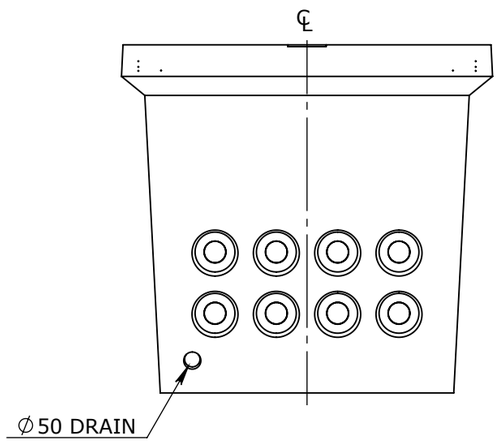

FACE 2

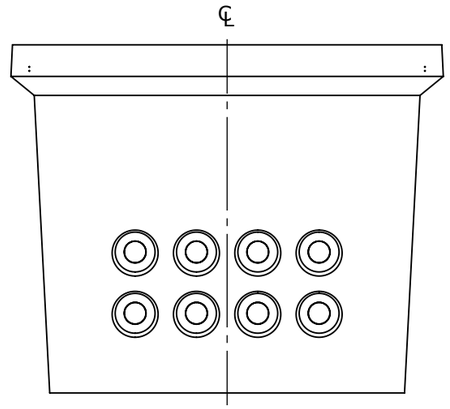

FACE 3

UNCONTROLLED DOCUMENT WHEN PRINTED

TOLERANCE NOTES:
1. CONCRETE TOLERANCES TO BE INCONJUCTION / ACCORDANCE WITH AS3600 - CONCRETE STRUCTURES
2. WHEN A BROOME FINISH IS REQUIRED THE GENERAL TOLERANCE SUPERCEEDS THE FLATNESS TOLERANCE
3. WALL THICKNESS - DIMENSION AS NOTED IS MINIMUM THICKNESS ONLY
4. CONCRETE GRADE - 40MPA UNLESS NOTED OTHERWISE
5. DIMENSIONS ARE NOT INCLUSIVE OF SEALANTS OF JOINTS
6. SURFACE FINISH - CLASS 4 (AS3610.1)

Rev.	DESCRIPTION	DATE	BY	APPROVED
0	ECO0442 RELEASED DRAWING	070225	ML	CA

REVISION CONTROL

GENERAL TOLERANCES

NOMINAL:	UP TO 1000mm	1M AND ABOVE
TOLERANCE:	±5mm	1mm IN 200mm UP TO A MAXIMUM OF 20mm

FLATNESS: (NOT INCLUDING BROOME FINISH) ±4mm PER 1M WIDTH IN 1M LENGTH

CHK / APPR: LM
DATE: 08-01-2020
RPEQ DOCUMENT #:
WEIGHT: 1153Kg
MATERIAL: CONCRETE FIBRE 40MPa
IRF REF:

Infrastructure Products Australia
A CRH COMPANY
HEAD OFFICE: 1 REEVES COURT BREAKWATER, VIC 3219 1800 065 356
ENGINEERING & DEVELOPMENT: 91 STRADBROKE STREET HEATHWOOD, QLD 4110 (07) 3714 0444

DRAWN TO AS 1100 DO NOT SCALE FROM SHEET

DRAFTED DATE:	24/11/2019
DRAFTED BY:	MLEE
DATE LAST SAVED:	7/02/2025
LAST SAVED BY:	MLEE
PART/PRODUCT #	50211268
QUOTE #	
ORDER #	
REINFORCEMENT COMPUTATION	
PIT #	
ITEM TYPE	
CLIENT	INFRASTRUCTURE PRODUCTS AUSTRALIA
PROJECT DESC	CATALOGUE PRODUCTS
DRAWING NAME	PIT CONCRETE BELLTOP 1100x900x1050 CLASS D VLINE KNOCKOUTS
DRAWING #	50211268
PAGE	1 / 1
SHEET SIZE	A3
SCALE	1:20
REV.	0

THE INFORMATION DISCLOSED IN THIS DOCUMENT IS CONFIDENTIAL AND IF NOT WITHOUT THE EXPRESS CONSENT OF 'INFRASTRUCTURE PRODUCTS AUSTRALIA' TO BE COPIED,REPRODUCED, OR GIVEN TO ANY OTHER PARTY IN ANY FORM AND THAT ALL COPYRIGHT, DESIGNS AND PATENTS VEST IN INFRASTRUCTURE PRODUCTS AUSTRALIA.